Work Order ID 65239

January 10, 2011 10:01:18 AM

Item ID: D4194-5
Revision ID: PRELIM
Item Name: Plunger Bushing

Accept

Setup Start
Stop

Start Date: 1/10/11 **Start Qty:** 2.00
Required Date: 1/28/11 **Req'd Qty:** 2.00
Reference:

Cust Item ID:
Customer:

Run Start
Stop

Approvals: **Process Plan:** CL **Date:** 11/01/10 **Tooling:** _____ **Date:** _____
QC: _____ **Date:** _____ **SPC (Y/N):** _____ **Date:** _____

Draw Nbr	Revision Nbr
D4194	~~PA1~~ ~~PA3~~ PA4 11.01.28

Sequence ID/ Work Center ID	Operation Description	Set Up/ Run Hours	Tool ID	Tool #	Plan Code	Accept Qty	Reject Qty	Reject Number	Insp. Stamp
100 Hardinge Hardinge CNC Lathe Small	~~Hardinge~~ CNC LATHE SMALL DOOSAN 11.01.12	0.00				2	Ø		
	Memo 1-TURN AS PER FOLIO FA985 & DWG FOLIO REV: N/A DWG REV: PA3 2-DEBURR AS REQUIRED	0.00 11/1/19							
110 QC Quality Control	QC2- Inspect parts off machine FAI/FAIB	0.00				2	Ø		
	Memo 11/1/19	0.00							
120 QC Quality Control	QC8- Inspect parts - second check	0.00							
	Memo	0.00				11.03.30	2	Ø	

POSITIVE RECALL

PRELIMINARY ISSUE

MATERIAL CERTIFICATION REQ'D UPON DELIVERY

Dart Aerospace Ltd

W/O:		WORK ORDER CHANGES					
DATE	STEP	PROCEDURE CHANGE	By	Date	Qty	Approval Chief Eng / Prod Mgr	Approval QC Inspector

Part No: _____ PAR #: _____ Fault Category: _____ NCR: Yes No DQA: _____ Date: _____

Resolution: _____ Disposition: _____ QA: N/C Closed: _____ Date: _____

NCR:		WORK ORDER NON-CONFORMANCE (NCR)						
DATE	STEP	Description of NC Section A	Corrective Action Section B			Verification Section C	Approval Chief Eng	Approval QC Inspector
			Initial Chief Eng	Action Description Chief Eng	Sign & Date			

NOTE: Date & initial all entries

H:\fFORMS\Quality Assurance\approved QA\NCRWO RevE

Work Order ID 65239

January 10, 2011 10:01:18 AM

Item ID: D4194-5
Revision ID: PRELIM
Item Name: Plunger Bushing

Accept

Setup Start
Stop

Start Date: 1/10/11 **Start Qty:** 2.00
Required Date: 1/28/11 **Req'd Qty:** 2.00
Reference:

Cust Item ID:
Customer:

Run Start
Stop

Approvals: **Process Plan:** _____ **Date:** _____ **Tooling:** _____ **Date:** _____
QC: _____ **Date:** _____ **SPC (Y/N):** _____ **Date:** _____

Sequence ID/ Work Center ID	Operation Description	Set Up/ Run Hours	Tool ID	Tool #	Plan Code	Accept Qty	Reject Qty	Reject Number	Insp. Stamp
130	Identify as per dwg & Stock Location: Pal Shelf	0.00							
Packaging	Memo	0.00							
Packaging						2	0		
140	QC21- Final Inspection - Work Order Release	0.00							
QC	Memo	0.00							
Quality Control									

11.03.30

Pl 11-069 (2)

POSITIVE RECALL
EFFECTIVE 11.06.10 AUTH
RELEASED _____ DATE _____
RD1344

Dart Aerospace Ltd

W/O:		WORK ORDER CHANGES					
DATE	STEP	PROCEDURE CHANGE	By	Date	Qty	Approval Chief Eng / Prod Mgr	Approval QC Inspector

Part No: _____ PAR #: _____ Fault Category: _____ NCR: Yes No DQA: _____ Date: _____

Resolution: _____ Disposition: _____ QA: N/C Closed: _____ Date: _____

NCR:		WORK ORDER NON-CONFORMANCE (NCR)						
DATE	STEP	Description of NC Section A	Corrective Action Section B			Verification Section C	Approval Chief Eng	Approval QC Inspector
			Initial Chief Eng	Action Description Chief Eng	Sign & Date			

NOTE: Date & initial all entries

H:\FORMS\Quality Assurance\approved QA\NCRWO RevE

Picklist Print

January 10, 2011 10:01:18 AM

Work Order ID: 65239

Parent Item: D4194-5

Parent Item Name: Plunger Bushing

Start Date: 1/10/11 **Required Date:** 1/28/11

Start Qty: 2.00 **Required Qty:** 2.00

Comments: IPP REV:A NEW ISSUE 10-10-20 JLM VERIFIED BY:DD

Component Item ID/ Item Name	Replacement Item ID	Mfg/ Purch	Bin Item	Primary Location	Last Location	Route Seq ID	Unit of Measure	Qty on Hand	Qty per Kit	Total Qty	Qty Issued	Date Issued	Status
MDELRINR0.500 .750 Delrin Round Bar .50"		Purchased	No			100	f	106.5000	0.0625	0.131579		11/1/19	

.750 11.01.28

Location	Loc Qty	Loc Code
MAT050	106.5	
102828	2	
109571	37.5	
18355	64	
3123	3	

M 116183

.3 ft

Dart Aerospace Ltd

W/O:		WORK ORDER CHANGES					
DATE	STEP	PROCEDURE CHANGE	By	Date	Qty	Approval Chief Eng / Prod Mgr	Approval QC Inspector

Part No: _____ **PAR #:** _____ **Fault Category:** _____ **NCR:** Yes No **DQA:** _____ **Date:** _____

Resolution: _____ **Disposition:** _____ **QA: N/C Closed:** _____ **Date:** _____

NCR:		WORK ORDER NON-CONFORMANCE (NCR)						
DATE	STEP	Description of NC Section A	Corrective Action Section B			Verification Section C	Approval Chief Eng	Approval QC Inspector
			Initial Chief Eng	Action Description Chief Eng	Sign & Date			

NOTE: Date & initial all entries

H:\fFORMS\Quality Assurance\approved QA\NCRWO RevE

DART AEROSPACE LTD	Work Order:	65239
Description: Bushing	Part Number:	A4194-5
Inspection Dwg: A4194 Rev: PA		Page 1 of 1

FIRST ARTICLE INSPECTION CHECKLIST

[X] First Article [ ] Prototype

Drawing Dimension	Tolerance	Actual Dimension	Accept	Reject	Method of Inspection	Comments
Ø .188	+.005/-.001	Ø.190	✓			
Ø.324	+.001/-.000	Ø.325	✓			
R.02	±.030	R.01	✓			
.98	±.030	.978	✓			
.25	±.030	.249	✓			
.13	±.030	.130	✓			
Ø.410	±.010	Ø.407	✓			
5/8-32 UN	N/A		✓			
Major Ø	.6179/.6239	.6228	✓			
M.O.W.	.6449/.6485	.647	✓			

Measured by:		Audited by:		Prototype Approval:	N/A
Date:	11/1/29	Date:	11.03.30.	Date:	N/A

Rev	Date	Change	Revised by	Approved
A		New Issue	KJ/JLM	

w/o 65239

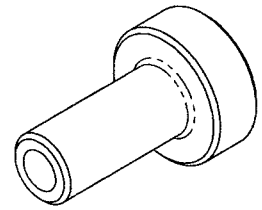

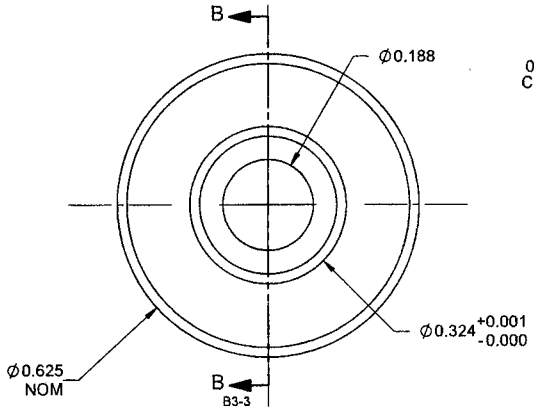

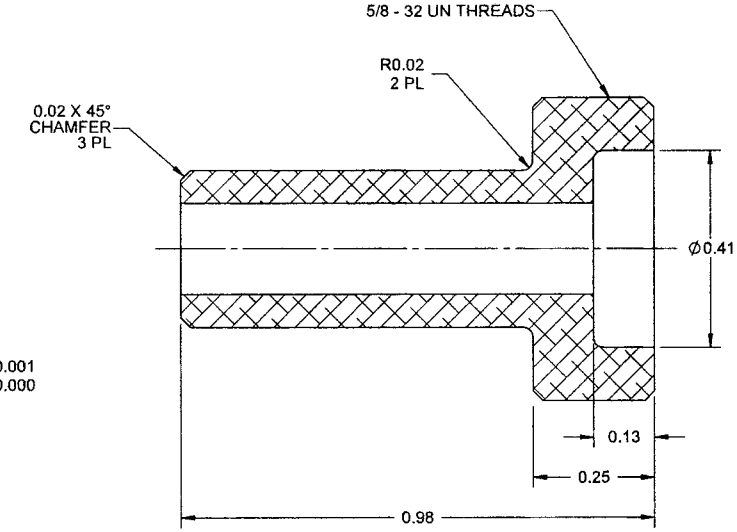

SECTION B-B B6-3

D4194-5 PLUNGER BUSHING

NOTES:
1) MATERIAL: BLACK DELRIN II 150E OR ACETRON GP ACETAL
REF DART SPEC M-DELRIN-R
2) FINISH: N/A
3) TOLERANCES: PER DART QSI 018 UNLESS OTHERWISE NOTED
4) UNITS: INCHES UNLESS OTHERWISE NOTED
5) BREAK SHARP EDGES: 0.005 TO 0.010 MAX
6) IDENTIFICATION: IDENTIFY PER QSI 044 6.1
7) WEIGHT: 0.00 lbs

PRELIMINARY ISSUE
10.10.28

DESIGN		**DART AEROSPACE LTD** HAWKESBURY, ONTARIO, CANADA
DRAWN		
CHECKED		DRAWING NO. D4194 — REV. PA4 — SHEET 3 OF 3
MFG. APPR.		
APPROVED		TITLE PLUNGER — SCALE NTS
DE APPR.		
DATE 10.10.28		

COPYRIGHT © 2010 BY DART AEROSPACE LTD
THIS DOCUMENT IS PRIVATE AND CONFIDENTIAL AND IS SUPPLIED ON THE EXPRESS CONDITION THAT IT IS NOT TO BE USED FOR ANY PURPOSE OR COPIED OR COMMUNICATED TO ANY OTHER PERSON WITHOUT WRITTEN PERMISSION FROM DART AEROSPACE LTD.

Receiving Report

Date: 10/11/18

Batch No: M116183

Supplier: SABIC

Dart P/O: 12918

Packing Slip: Yes ✓ No ___
Invoice: Yes ___ No ✓
Receipt: Cash ___ Cr ✓

Release Note Attached: Yes ✓ No ___ N/A ___
Waybill Attached: Yes ✓ No ___
Shipment Complete: Yes ✓ No ___ N/A ___
QC6 Inspection ✓ N/A
Work Order Stolutg N/A ✓

Discrepancies

Part Number	Description	Quantity Ordered	Quantity Received	Quantity Returned	Quantity Short	Comments

Initials of receiver (if shipment OK) Level 12

Production/Admin:
Date 10/11/18
Received/Costing
Initial

Location ___

H:\FORMS\Purchasing\approved purch\RECREPORT Rev D

Purchase Order Receipt Listing

Thursday, November 18, 2010 3:27:55 PM

All amounts are calculated in domestic currency.

All Vendors PO ID PO12919 Receipt Dates from 11/18/2010 to 11/18/2010 All Line Item Types
All Item ID/GL/WOs All Rec. Employees All Currencies
Grouped by Vendor ID

Purchase Order ID/ Curr Type	Line Nbr/ Insp Req	Project ID	Reference/ Description/ Cert Std	PO U/M / Stock U/M	Required Date Required Qty	Recv Date/ Recv Emp	Recv Qty (PO U/M)	Cost Per Unit/ Recv Value	Inspected Qty/ Rejected Qty (PO U/M)	MRB Qty/ MRB Reject Qty	Book Amt
VendorID\Vendor Name		**VC-GEP001**	**SABIC Polymershapes**								
PO12919	1		MDELRINR0.750	f	11/19/2010	11/18/2010	80.0000	$2.60	0.0000	0	$208.00
CAD	No		Delrin Round Bar 0.75" 116183	f	80.0000	DESJ02		$208.00	0.0000	0	

Total Received Quantity:	80.0000
Total Qty to Inspect (PO U/M):	0.0000
Total Reject Quantity:	0.0000
Total Receipt Value:	$208.00
Total Balance Due Quantity:	0.0000

*** SHIPPER ***

*** Conversion/Fabrication ***

A/C 8.59

SABIC Polymershapes
1250 Old Innes Rd., Unit 519

Page: 1

Ottawa, Ontario K1B 5L3
PST 85637 2750 TR0001
PHONE: (613)745-7043 FAX: (613)745-4291

SOLD TO: DART AEROSPACE LTD
1270 ABERDEEN STREET
HAWKESBURY ON K6A 1K7
Canada

SHIP TO: DART AEROSPACE LTD
1270 ABERDEEN STREET
HAWKESBURY ON K6A 1K7
Canada
1-613-632-5200

Our Order No	Customer	GST License	PST License	Invoice Terms	Ordered	Shipped	Taken By	RDD
093998	DARAER	CHARGE GST	6112-5207	NET 30 DAYS	16.11.10		caldwellj	17.11.10

Ship.Doc.No	Salesrep	Customer P.O.#	Shipped Via	F.O.B.	Freight Terms	Inv. No.	Ship Date
01	93	12919	PUROLATOR		COLLECT		16.11.10

Ln#	Location	Ord	B/O	Ship Sku	Product Code	Description	U/Price
						********** DELIVERIES TO BE DONE BEFORE 4:00 PM , ADVISE SHIPPING CO. **********	
001		80	0	80 FT	91106455	ACETRON GP ROD - BLACK .750 DIA.	
002		1	0	1 EA	0000005	THANK YOU FOR SELECTING SABIC POLYMERSHAPES	

Shippable Weight: 21.60 Lb

LINE No.	RECEIVING No.	PICKED BY	DATE	SHIPPED BY	DATE	VERIFIED	DATE
					16/11/10		

NO GOODS TO BE RETURNED WITHOUT APPROVAL FROM SABIC. ALL DISCREPANCIES MUST BE REPORTED WITHIN 10 DAYS.
ALL RETURNS MUST HAVE VALID RETURNED GOODS AUTHORIZATION NUMBER CLEARLY MARKED ON ALL PACKAGES.

SABIC
innovative
Plastics

سابك
sabic

SABIC Polymershapes

1250 OLD INNES RD. 519 OTTAWA,ONT. K1B 5L3
TEL: 613 745 7043 FAX: 613 745 8163

CERTIFICATE OF COMPLIANCE

SOLD TO: DART AEROSPACE

DATE:11/16/2010

YOUR PURCHASE ORDER: 12919

OUR SHIPPER NO: O93998

LINE ITEM # :1

QUANTITY: 80 FT

DESCRIPTION: .ACETRON GP BLACK .750 DIA

THESE PARTS WERE MANUFACTURED IN ACCORDANCE WITH: ASTM D4181

THIS IS TO CERTIFY THAT THE MATERIAL FINISHES AND FUNCTIONAL REQUIREMENTS OF THE ABOVE LISTED PARTS ARE IN ACCORDANCE WITH THE REFERENCE PROCUREMENT SPECIFICATIONS, CONTROL DRAWINGS OR PARTS DESIGNATION AND LATEST REVISIONS AS REFERENCED ON THE SUBJECT PURCHASE ORDER.

AUTHORIZED REPRESENTATIVE SIGNATURE

Jon Caldwell

JON CALDWELL
BRANCH MANAGER

Dart Aerospace Ltd.
1270 Aberdeen Street
Hawkesbury, ON K6A 1K7
Tel: 613 632 9577
Fax: 613 632 1053

PURCHASE ORDER

Purchase Order ID **PO12919**

Purchase Order Date 11/15/10
PO Print Date 11/15/10

Order From : VC-GEP001

SABIC POLYMERSHAPES
9150 AIRPORT ROAD
BRAMPTON, ON L6S 6G1
CA

Contact Name		**Buyer**	Chantal Lavoie
Vendor Phone	800 267 1575	**Requisition Nbr**	
Vendor Fax	613 745 4291	**Tax Resale Nbr**	10127-2607
Vendor Account Nbr		**Terms**	Net 30
		Currency	CAD
		FOB	Destination-Collect

Ship To : DART AEROSPACE LTD 1270 ABERDEEN
HAWKESBURY, ON K6A 1K7
CANADA

FAXED

Line Nbr	Reference / Revision ID / Vendor Part Number	Description/ Mfg ID	Req Date/ Taxable	Req Qty/ Unit of Measure	Ship Method	Unit Price	Extended Price
1	MDELRINR0.750	Delrin Round Bar 0.75"	11/19/10 Yes	80.00 f	Purolator ground	$2.6000	$208.00

Special Inst: MATERIAL: DELRIN II 150E OR ACETRON GP ACETAL
COLOR: BLACK

PO Total: **$208.00**

MATERIAL CERTIFICATION REQ'D UPON DELIVERY

No substitution or deviation without consent.
Certificate of Conformity or Material Certification required when applicable

Change Nbr: 1 **Change Date:** 11/15/10

M6061T6B1.500X01.500	6.017215789	0	13.1762	12
M6061T6B2.000X04.500	2.495783684	0	10.86631	6
M6061T6B30000X01.500	1.159783811	0	23.1789	20
M6061T6R0.625	43.77064737	0	60.96	30
M6061T6R0.750	10.23608421	0	19.96484211	40
M6061T6R1.000	4.446821053	0	13.68	12
M6061T6S.125	12.34687403	0	72.06	96
M6061T6T0.375W.035	8.771446674	0	239.096716	100
M6061T6T0.500W.035	11.05106842	0	244.055	100
M6061T6T0.500W.058	32.25105263	0	104.5	80
M6061T6T1.000W.188	50.41625361	0	78.195188	40
M6061T6T1.500W.125	3.026315789	0	29.5	12
M6061T6T1.750W.065	1.956842105	0	31.959	12
M6061T6T3.500W.375	5.368421053	0	8.5	0
M6061T6T5.000W.125	9.757889474	0	28.3754	6
M6061T6TR4.0X2.0W125	19.80520526	0	40	6
M6061T6TS0.750W.062	56.04731211	0	120.91227	100
M7075T6A1.5X1.5X.063	2	0	12	0
M7075T73B4.000x4.000	2.189473684	0	0	6
M7885/2-4-3	12	0	441	80
M7885/3-4-4	16	0	183	100
M7885/3-4-5	3	0	71	50
M81714/16-3	1	0	2	4
M81714/2-DC1	3	0	0	4 5
M81714/2-DD2	1	0	1	4 3
M83536/2-024	1	0	1	4 3
M-ALXTRAB-S.300	13.25358567	0	421.95	96
MDELRINB0.250X01.000	2.526315789	0	7	6
MDELRINB0.75X1.250	5.105263158	0	30.4224	12
MDELRINB1.250X2.500	1.502	0	8	6
MDELRINB2.000X02.000	10.75501579	0	11.534	6
MDELRINR0.750 2.60	65.38996842	0	56.537	24 80 8+
MDELRINR1.500	1.481457895	0	13.25	6
MLEXS.093-F6006-02	52.63917633	0	931.635	200

TRANSMISSION VERIFICATION REPORT

TIME : 11/15/2010 16:12
NAME :
FAX :
TEL :
SER.# : F9N212739

DATE,TIME	11/15 16:12
FAX NO./NAME	16137454291
DURATION	00:00:18
PAGE(S)	01
RESULT	OK
MODE	STANDARD ECM

Purolator

FROM/DE

Sabic Polymershapes
1250 Old Innes RD
SUITE 519
Ottawa, ON K1B 5L3
(613) 745-7043 ext. 229

REF:

TO/À

ATTN: LINDA LACELLE
DART AEROSPACE LTD.

COLLECT

1270 ABERDEEN ST

Hawkesbury, ON K6A 1K7
(613) 632-3336

NOTE:

DATE	PIECES	WEIGHT/POIDS
16 Nov 2010	1 of/de 1	20.00 lb.

1406321116/2010 11:28:30 AM

PIN: 329 304 563 201

41

Fold the Bill of Lading on the dotted line and insert into the labelope. Attach a Bill of Lading to each package.
Veuillez plier ce connaissement sur la ligne pointillée et l'insérer dans l'enveloppe autoadhésive. Veuillez joindre un connaissement à chaque colis.

Description: ACETRO GP BLACK ROD

No Declared Value Entered By Sender / Aucune valeur déclarée entrée par l'expéditeur

CONDITIONS OF CARRIAGE

IMPORTANT - PLEASE READ: The consignor agrees that the act of tendering the shipment to the carrier for transportation shall be sufficient to constitute signature of this bill of lading by the consignor and shall bind the consignor to the conditions of carriage stated below.

RECEIPT Carrier acknowledges receiving from the shipper, at the point of origin and on the date specified, the shipment described in this bill of lading in apparent good order, except as noted (contents and conditions of contents of shipment unknown), and agrees to carry and deliver the shipment to the receiver at the destination set out in this bill of lading, subject to payment of all lawful charges. "Carrier" refers to Purolator Courier Ltd. and any connecting and/or successive carriers involved in the transportation of the shipment herein described, including any of their respective subsidiaries, controlled entities, and their respective employees, agents and independent contractors.

LIMITATION ON LIABILITY Carrier's liability in respect of the shipment described in this bill of lading (including for any loss, damage, delay, misdelivery, non-delivery or failure to deliver) is limited to $2.00 per pound ($4.41 per kilogram) computed on the total weight of the shipment, unless a higher value is declared in the specially marked Purolator Online Shipping user entry field, "Declared Value for Insurance ($)". Notwithstanding any disclosure of the nature or value of the goods carried or any special agreement to the contrary, carrier is not liable under any circumstances for the consequences of delay, or for any indirect or consequential damages (including lost profits) howsoever caused.

NOTICE OF CLAIM Carrier is not liable for any loss, damage or delay to any goods carried under this bill of lading unless notice of the claim setting out particulars of the origin, destination and date of shipment of the goods and the estimated amount claimed in respect of such loss, damage or delay is given in writing to the carrier within sixty (60) days after the delivery of the goods, or, in the case of failure to make delivery, within nine (9) months from the date of shipment. Subject to any overriding statutory provisions, the final statement of the claim must be filed within nine (9) months from the date of shipment, together with a copy of the paid freight bill. If the Convention applies, other notice periods may govern. No claim will be entertained until all transportation charges due in connection with this bill of lading have been paid in full. All claims are subject to proof of amount of loss.

TERMS INCORPORATED BY REFERENCE Every service to be performed under this bill of lading is subject to the conditions of carriage contained in this bill of lading, including the terms and conditions contained in Purolator Courier Ltd.'s published terms and conditions of carriage and the terms and conditions prescribed by the law of the jurisdiction where the goods originate (including the uniform conditions of carriage thereunder, if any). If the carriage involves an ultimate destination or a stop in a country other than the country of departure, the Convention (as defined below) may apply and limit the liability of the carrier in respect of loss of, damage to or delay of cargo. "Convention" means the Convention for the Unification of Certain Rules relating to International Carriage by Air, signed at Warsaw, Poland, 12 October, 1929, or the Convention for the Unification of Certain Rules for International Carriage by Air, signed at Montreal, Canada, 28 May, 1999, or those Conventions as amended or supplemented as may be applicable to the carriage hereunder.

MISCELLANEOUS Unless otherwise indicated, the consignor's name and address is the sender's name and address indicated on this bill of lading, and the latter is the place of execution and the place of departure; the consignee's name and address is the receiver's name and address indicated on this bill of lading, and the latter is the place of destination; and the date indicated on this bill of lading is the date of execution. There are no specific stopping places which are agreed to, and the carrier reserves the right to select the route and the mode of transportation that the carrier deems appropriate. The consignor warrants that the shipment is properly described on this bill of lading and on any accompanying documentation, and that the shipment is properly marked, addressed and packed to ensure safe transportation in accordance with the carrier's ordinary care in handling. Unless otherwise indicated on this bill of lading, the consignor waives its right to determine the volume or dimensions of the shipment, and to indicate same on this bill of lading. The consignor appoints the carrier as its agent for the performance of customs clearance and selecting a customs broker.

ENTIRE AGREEMENT The terms and conditions contained in this bill of lading, including those incorporated herein by reference, constitute the entire agreement relating to the carriage of the shipment described in this bill of lading, and no agent, servant or representative of the carrier or consignor has the authority to alter, waive or otherwise modify any provision of this agreement. In tendering the shipment described herein for carriage, the consignor agrees to these terms and conditions on his own behalf and on behalf of the consignee and any other party claiming an interest in this shipment.